BPGF Fire Resistant Range

IP66

The BPGF range comprises two sizes of fire-rated enclosure pre-assembled with Abtech's ceramic terminal block. Supplied complete with four M20 threaded entries, two stainless steel plugs and two transit plugs.

- Increased fire survivability for safety critical electronic circuits
- PH120 to BS EN 50200 and BS 8434-2
- Tested in accordance with IEC 311
- 8-way or 12-way ceramic terminals
- All Stainless-Steel fixings

Enclosure Ratings

Product Reference	Width (mm)	Height (mm)	Depth (mm)	No. of Terminals	Max Conductor Size (mm^2)	Weight (kg)
BPG6F-120	122	120	90	8	6.0	0.95
BPG8F-160	160	160	90	12	6.0	0.95

Standard Specifications

Enclosure Type	Pre-assembled Fire Resistant GRP
Ingress Protection	IP66 to EN60529
Impact Resistance	>7Nm
Ambient Temp Rating	-65^{0}C to +130^{0}C (for normal operation)
Material	Glass reinforced polyester in grey (RAL 7001). Captive 316 stainless steel fasteners and ceramic terminal block.
Oxygen Index	41.8%
Smoke Density	0.0328
Toxicity	CIT_{NLP} = 0.05 'R' Value to BS6853 Annex B.1 = 0.23
Connector Size	Up to 6mm^2
Fire Resistance Testing	
PH120	Insulation integrity (120-minute exposure) in accordance with BS EN 50200 & BS 8434-2 (>930^{0}C) with exposure to fire with water spray & mechanical shock. Rated voltage 600V rms.
IEC 331	Insulation integrity (180-minute exposure) in accordance with IEC (>750^{0}C) with exposure to fire with water spray & mechanical shock. Electrical system fully functional before, during and after test.

Product design and specifications are subject to change without notice; please check the website for latest specifications

Dimensions

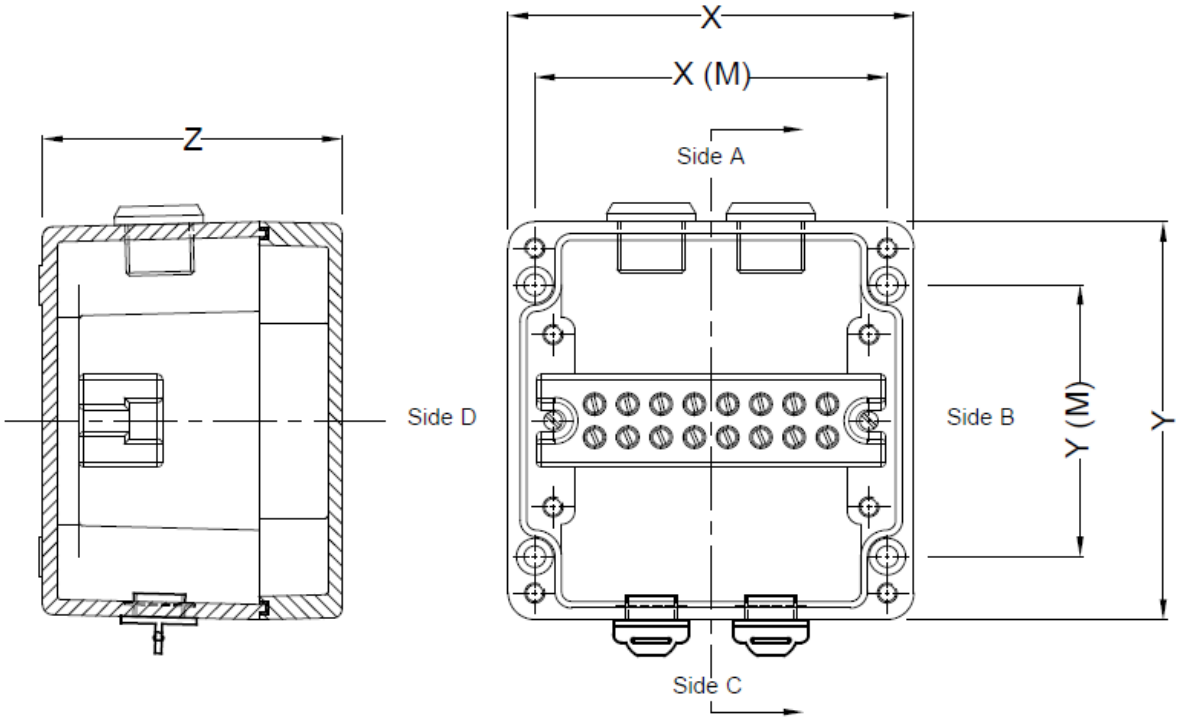

	BPG6F-120	BPG8F-120
X	122	160
X(M)	106	140
Y	120	160
Y(M)	82	110
W	36	56

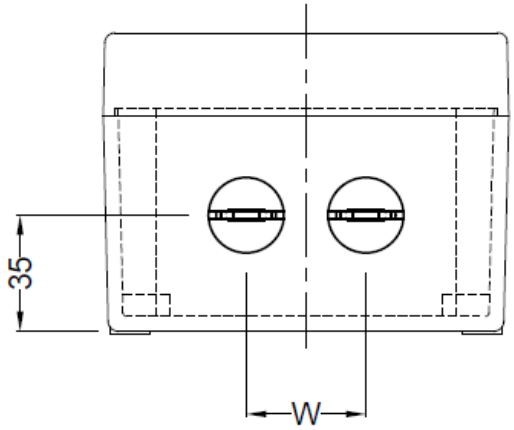

Options

There are no options available for this product

Accessories

EAMFBPG0615SS	External mounting feet in Stainless Steel